Usage Guide - Roll Toilet Tissue Dispenser

1 How to Load

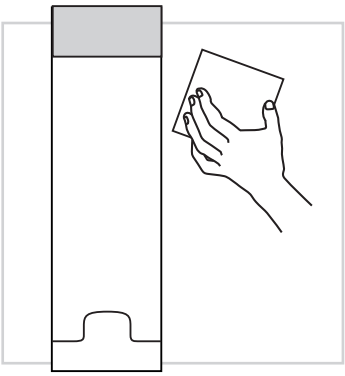

1. Use key to unlock the dispenser and remove top lid.

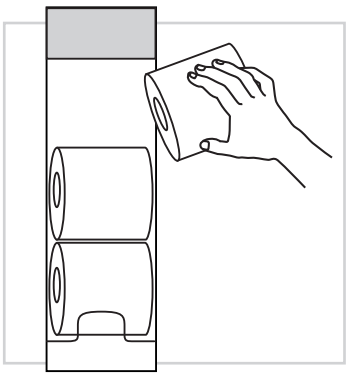

2. Remove wrappers and insert three rolls into dispenser

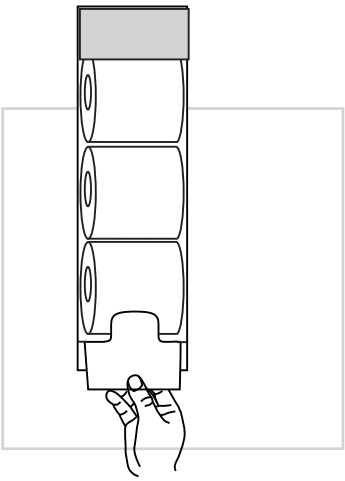

3. Feed first roll through mouth at bottom of dispenser.

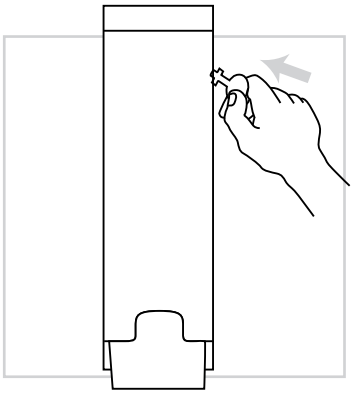

4. Replace lid and lock with key.

2 How to Use

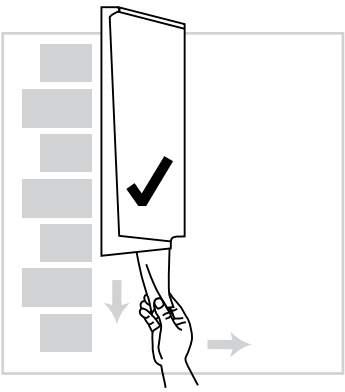

1. Pull tissue straight down and tear at an angle.

Kimberly-Clark® Professional